Photoelectric Sensor
Triangulation Sensor with Switching Output
Q50AP

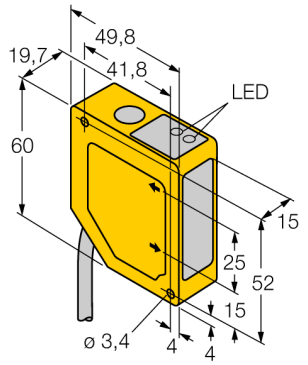

- Foreground and background suppression
- Operating range 50…200 mm
- 2 m cable, 5-pole
- Operating voltage 12…30 VDC
- PNP switching output
- Response time of output 64 ms

Wiring Diagram

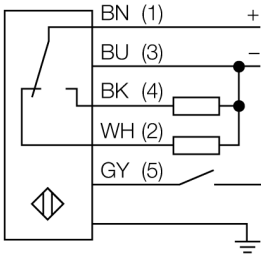

Type	Q50AP
ID	3067615

Optical data	
Function	Proximity switch
Operating mode	Triangulation
Light type	IR
Wavelength	880 nm
Range	50…200 mm
Ambient light immunity	10,000 lux

Electrical data	
Operating voltage U_B	12…30 VDC
No-load current I_0	≤ 70 mA
Output function	NO/NC, PNP
Switching frequency	≤ 7 Hz
Readiness delay	≤ 2 s
Readiness delay	≤ 2000 ms
Response time typical	< 48 ms

Mechanical data	
Design	Rectangular, Q50
Housing material	Plastic, ABS/Polycarbonate
Lens	plastic, Acrylic
Electrical connection	Cable, 2 m, PVC
Number of cores	5
Core cross-section	0.5 mm²
Ambient temperature	-10…+55 °C
Protection class	IP67

Switching state	LED, Yellow

Tests/approvals

Functional principle

The function principle of the Q50 is based on optical triangulation. The emitter and the optics create a light source that is directed towards a target. The target reflects the light back to the receiver lens of the sensor, from where it then is directed to the position sensitive device (PSD) as the receiver element. The target's distance from the receiver determines the angle at which the light meets the receiver element. This angle in turn determines where the reflected light falls onto the PSD. The microprocessor analyses and compares the target position to the programmed position values and creates a corresponding output signal.

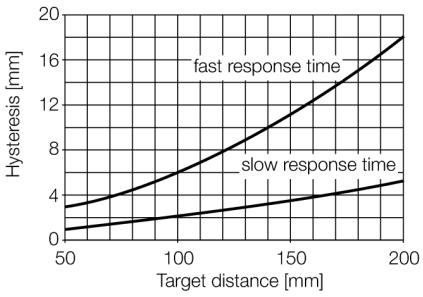

Edition • 2025-02-26T12:58:57+01:00