BI3U-S12-AN6X-H1141
Inductive Sensor

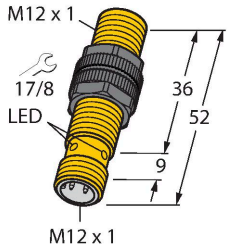

Features

- Threaded barrel, M12 x 1
- Plastic, PBT-GF30
- Factor 1 for all metals
- Protection class IP68
- Resistant to magnetic fields
- Extended temperature range
- High switching frequency
- DC 3-wire, 10…30 VDC
- NO contact, NPN output
- M12 x 1 male connector

Wiring diagram

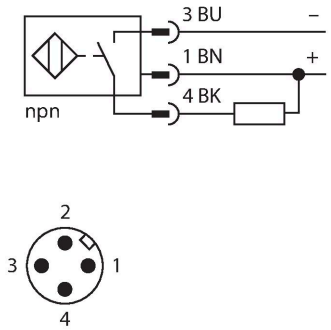

Technical data

Type	BI3U-S12-AN6X-H1141
ID	1634620
General data	
Rated switching distance	3 mm
Mounting conditions	Flush
Secured operating distance	≤ (0.81 × Sn) mm
Repeat accuracy	≤ 2 % of full scale
Temperature drift	≤ ±10 %
	≤ ± 15 %, ≤ -25 °C v ≥ +70 °C
Hysteresis	3…15 %
Electrical data	
Operating voltage U_B	10…30 VDC
Ripple U_{ss}	≤ 10 % U_{Bmax}
DC rated operating current I_e	≤ 200 mA
No-load current	≤ 25 mA
Residual current	≤ 0.1 mA
Isolation test voltage	0.5 kV
Short-circuit protection	yes/Cyclic
Voltage drop at I_e	≤ 1.8 V
Wire break/reverse polarity protection	yes/Complete
Output function	3-wire, NO contact, NPN
DC field stability	300 mT
AC field stability	300 mT_{ss}
Insulation class	2
Switching frequency	3 kHz
Mechanical data	
Design	Threaded barrel, M12 x 1

Functional principle

Inductive sensors are designed for wear-free and contactless detection of metal objects. uprox Factor 1 sensors have significant advantages due to their patented ferrite-coreless multi-coil system. They detect all metals at the same large switching distance and are resistant to magnetic fields.

BI3U-S12-AN6X-H1141| 21-02-2025 14-51 | Technical modifications reserved

Technical data

Dimensions	52 mm
Housing material	Plastic, PBT-GF30
Active area material	Plastic, PA12-GF30
Max. tightening torque of housing nut	1 Nm
Electrical connection	Connector, M12 × 1
Environmental conditions	
Ambient temperature	-30…+85 °C
Vibration resistance	55 Hz (1 mm)
Shock resistance	30 g (11 ms)
Protection class	IP68
MTTF	874 years acc. to SN 29500 (Ed. 99) 40 °C
Switching state	LED, Yellow

Mounting instructions

Mounting instructions/Description

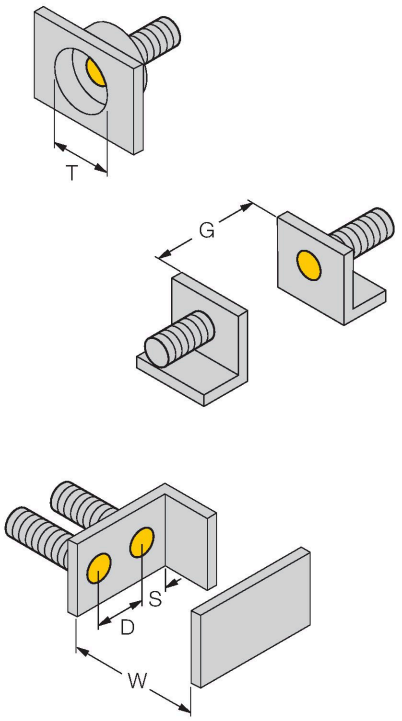

Distance D	2 x B
Distance W	3 x Sn
Distance T	3 x B
Distance S	1.5 x B
Distance G	6 x Sn
Diameter active area B	Ø 12 mm

BI3U-S12-AN6X-H1141| 21-02-2025 14-51 | Technical modifications reserved

Accessories

QM-12	6945101
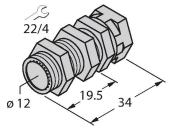	Quick-mount bracket with dead-stop; material: Chrome-plated brass. Male thread M16 × 1. Note: The switching distance of the proximity switches may change when using quick-mount brackets.

BST-12B	6947212
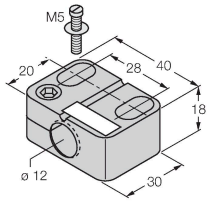	Mounting clamp for threaded barrel sensors, with dead-stop; material: PA6

MW12	6945003
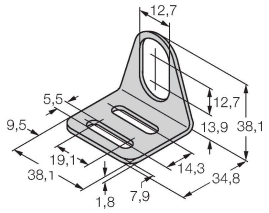	Mounting bracket for threaded barrel sensors; material: Stainless steel A2 1.4301 (AISI 304)

BSS-12	6901321
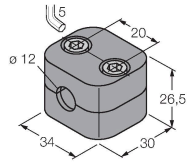	Mounting clamp for smooth and threaded barrel sensors; material: Polypropylene

Accessories

Dimension drawing	Type	ID	
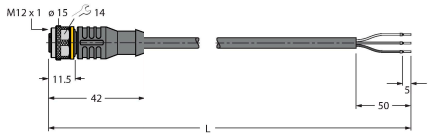	RKC4T-2/TEL	6625010	Connection cable, M12 female connector, straight, 3-pin, cable length: 2 m, jacket material: PVC, black; cULus approval

BI3U-S12-AN6X-H1141| 21-02-2025 14-51 | Technical modifications reserved