# BI20U-CK40-AN6X2-H1141
# Inductive Sensor – With Extended Switching Distance

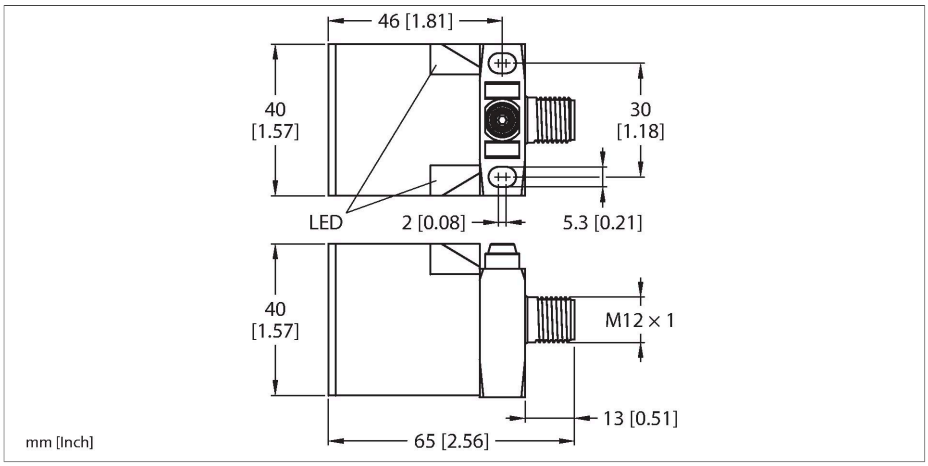


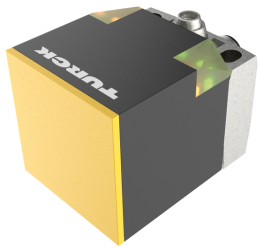

## Technical data

| | |
|---|---|
| Type | BI20U-CK40-AN6X2-H1141 |
| ID | 1627231 |
| **General data** | |
| Rated switching distance | 20 mm |
| Mounting conditions | Flush |
| Secured operating distance | ≤ (0.81 × Sn) mm |
| Repeat accuracy | ≤ 2 % of full scale |
| Temperature drift | ≤ ±10 % |
| Hysteresis | 3…15 % |
| **Electrical data** | |
| Operating voltage $U_B$ | 10…30 VDC |
| Ripple $U_{ss}$ | ≤ 10 % $U_{Bmax}$ |
| DC rated operating current $I_e$ | ≤ 200 mA |
| No-load current | ≤ 15 mA |
| Residual current | ≤ 0.1 mA |
| Isolation test voltage | 0.5 kV |
| Short-circuit protection | yes/Cyclic |
| Voltage drop at $I_e$ | ≤ 1.8 V |
| Wire break/reverse polarity protection | yes/Complete |
| Output function | 3-wire, NO contact, NPN |
| DC field stability | 300 mT |
| AC field stability | 300 $mT_{ss}$ |
| Insulation class | ⧈ |
| Switching frequency | 0.25 kHz |
| **Mechanical data** | |
| Design | Rectangular, CK40 |
| Dimensions | 65 x 40 x 40 mm |

## Features

- Rectangular, height 40 mm
- Variable orientation of active face in 5 directions
- Plastic, PBT-GF30-V0
- High luminance corner LEDs
- Optimum view on supply voltage and switching state from any position
- Factor 1 for all metals
- Protection class IP68
- Resistant to magnetic fields
- Large coverage
- High switching frequency
- DC 3-wire, 10…30 VDC
- NO contact, NPN output
- M12 x 1 male connector

## Wiring diagram

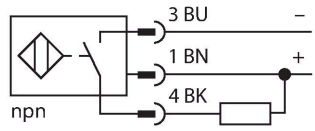


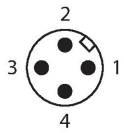


## Functional principle

Inductive sensors are designed for wear-free and contactless detection of metal objects. uprox+ sensors have significant advantages due to their patented multi-coil system. They excel thanks to their optimum switching distances, maximum flexibility and operational reliability as well as efficient standardization.

BI20U-CK40-AN6X2-H1141| 21-02-2025 14-51 | Technical modifications reserved

## Technical data

| | |
|---|---|
| | variable orientation of active face in 5 directions |
| Housing material | Plastic, PBT-GF20-V0, Black |
| Active area material | Plastic, PA12-GF30, yellow |
| Electrical connection | Connector, M12 × 1 |
| **Environmental conditions** | |
| Ambient temperature | -30…+85 °C |
| Vibration resistance | 55 Hz (1 mm) |
| Shock resistance | 30 g (11 ms) |
| Protection class | IP68 |
| MTTF | 874 years acc. to SN 29500 (Ed. 99) 40 °C |
| Power-on indication | 2 × LEDs, Green |
| Switching state | 2 × LEDs, Yellow |
| Included in delivery | BS1-CK40 |

## Mounting instructions

Mounting instructions/Description

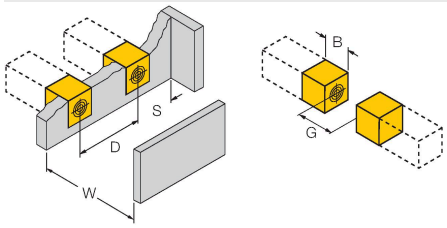


| | |
|---|---|
| Distance D | 80 mm |
| Distance W | 60 mm |
| Distance S | 40 mm |
| Distance G | 120 mm |
| Width active area B | 40 mm |

## Accessories

| BSS-CP40 | 6901318 |
|---|---|

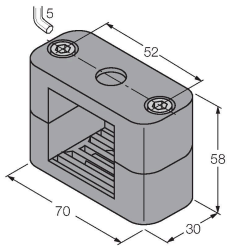


Mounting clamp for rectangular housings 40 x 40 mm; material: Polypropylene

BI20U-CK40-AN6X2-H1141| 21-02-2025 14-51 | Technical modifications reserved

## Accessories

| Dimension drawing | Type | ID | |
|---|---|---|---|
| | RKC4T-2/TEL | 6625010 | Connection cable, M12 female connector, straight, 3-pin, cable length: 2 m, jacket material: PVC, black; cULus approval |

BI20U-CK40-AN6X2-H1141| 21-02-2025 14-51 | Technical modifications reserved